Thank you for your purchase!

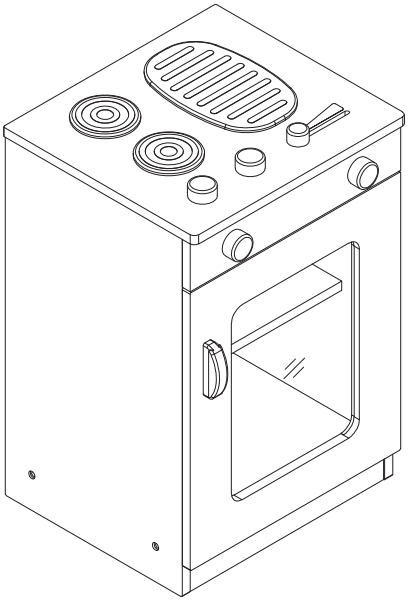

WOODEN OVEN WITH HOB 600MM
PRE SCHOOL
19805

ASSEMBLY INSTRUCTIONS

Before You Begin: Phillips screwdriver (not included) required for assembly

Please identify all component parts and hardware pieces required before you begin. Carefully remove all of the components from the packaging and set aside for assembly. Assemble on a soft surface to prevent scratching during assembly. Phillips screwdriver required for assembly (Not included)

Caution:

Tighten all components securely before use. Failure to do so may result in personal injury. DO NOT use any sharp objects to open plastic wrapped components as damage to product or componenets may result.

⚠ Warning:

Tighten all components securely before use. Failure to do so may result in personal injury. DO NOT use any sharp objects to open plastic wrapped components as damage to product or componenets may result.

CHOKING HAZARD - Small Parts. Adult Assembly Required.

DO NOT ALLOW CHILDRED TO STAND OR SIT ON THE PRODUCT

⚠ WARNING:

Adult assembly required. This item contains small parts that have sharp points and edges in the unassembled state. Adults must be extra careful to securely tighten all screws, made sure the item is properly assembled, and ensure there are no left-over metel parts (eg. Allen key) within reach to children.

⚠ **WARNING:**
CHOKING HAZARD – Small Parts.
Not for children under 3 years.

ages/âges 3y+

0-3

CE UK CA

Customer Service Email:sales@gompels.co.uk | Phone:0345 450 2420

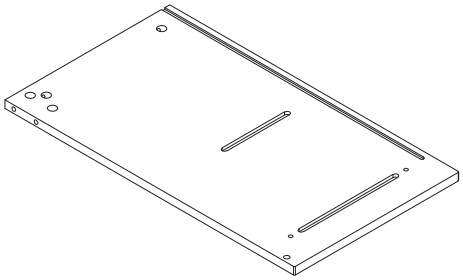

1

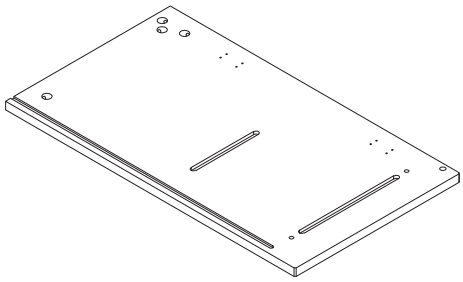

2

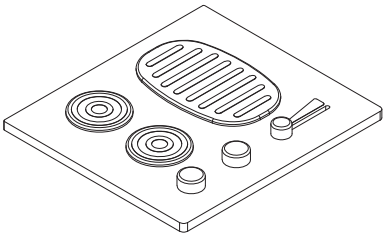

3

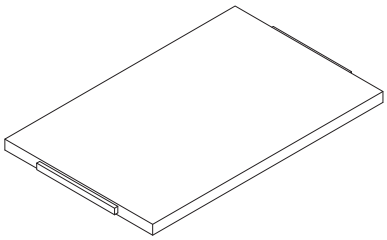

4

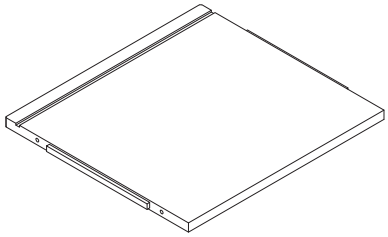

5

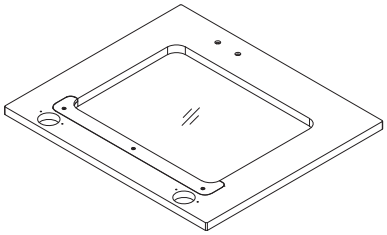

6

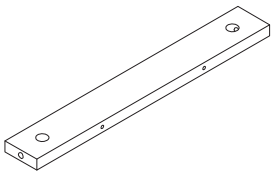

7

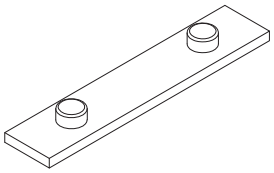

8

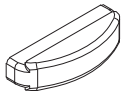

9

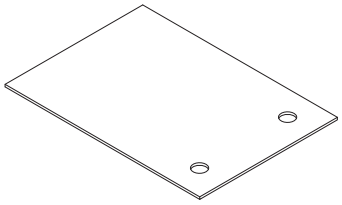

10

19805

Tool Required 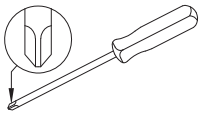

Accessories Included:

 A x 10	 B x 10	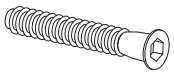 C x 4	 D x 2
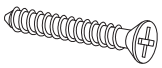 E x 2	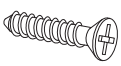 F x 12	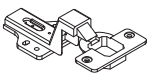 G x 2	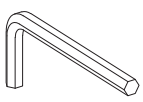 H x 1

1

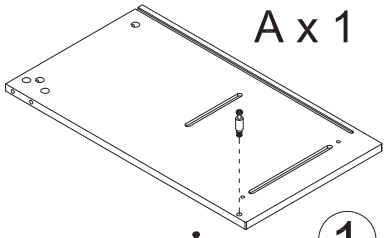

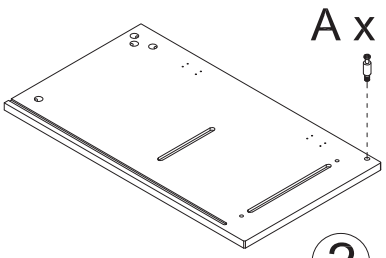

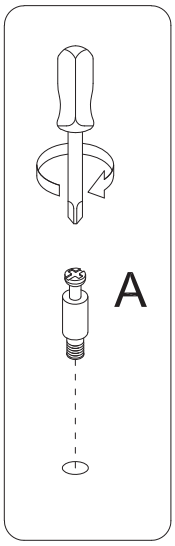

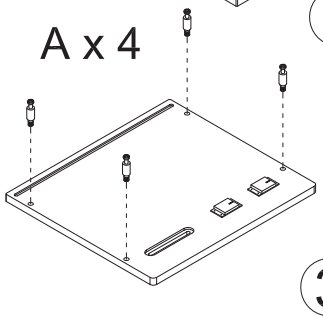

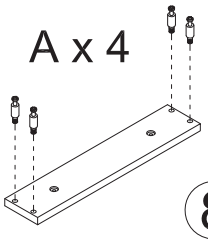

2

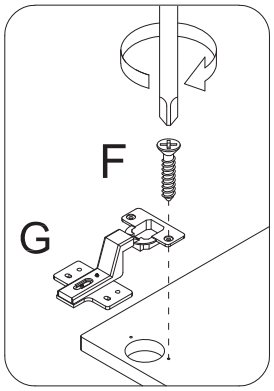

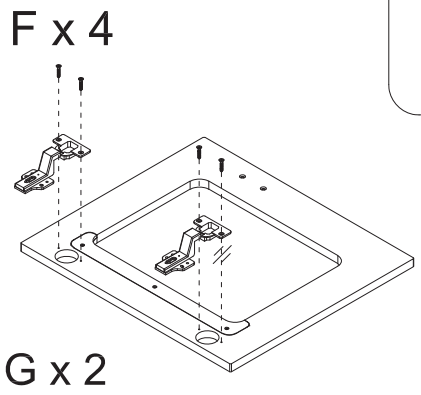

3

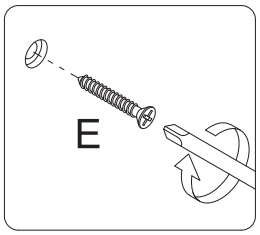

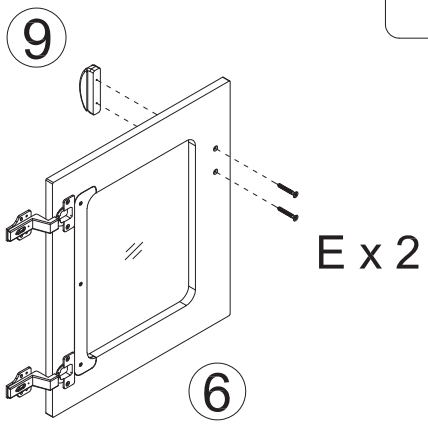

4

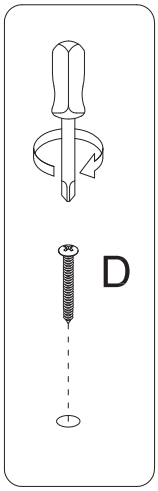

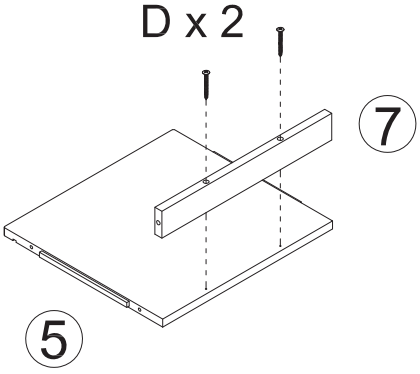

5

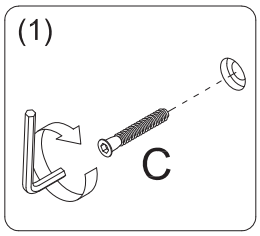

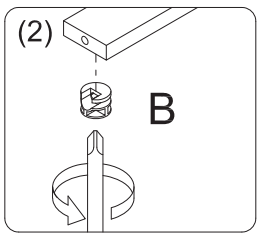

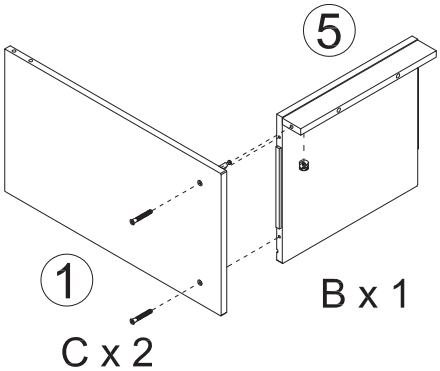

6

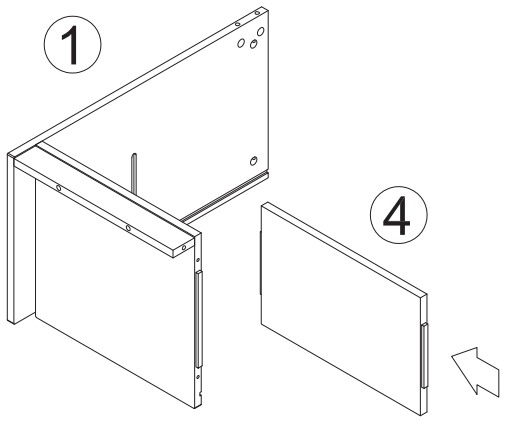

7

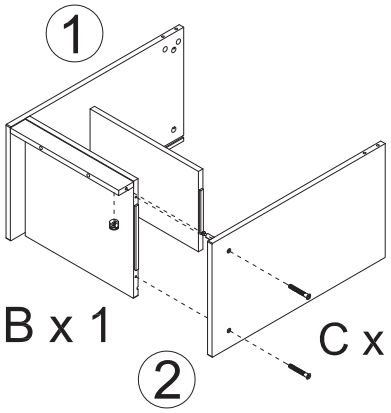

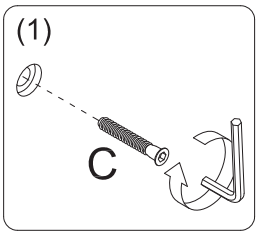

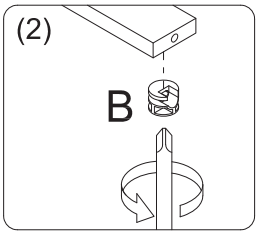

8

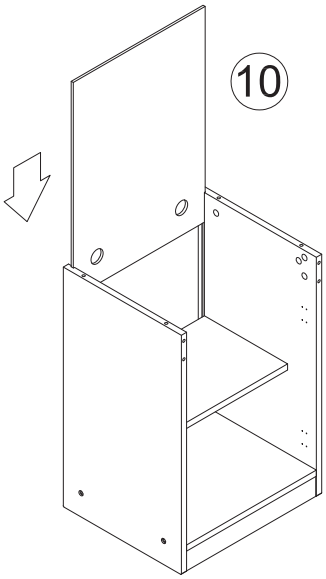

9

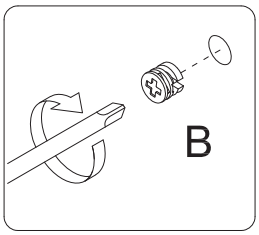

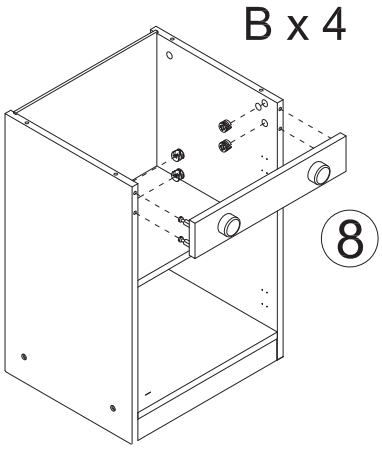

10

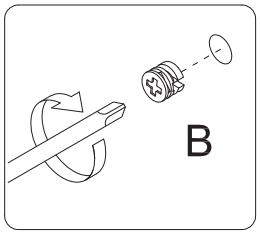

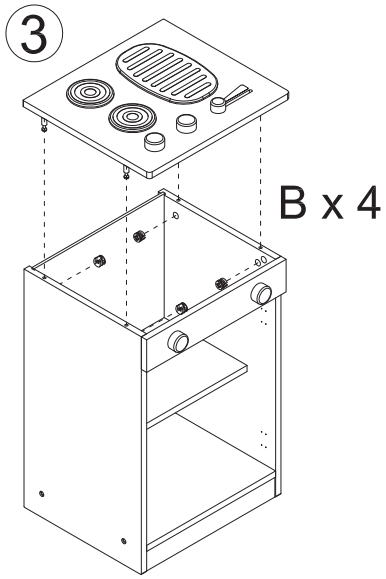

11

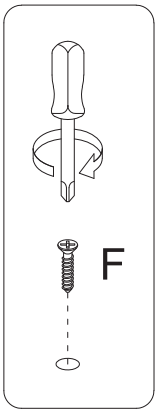

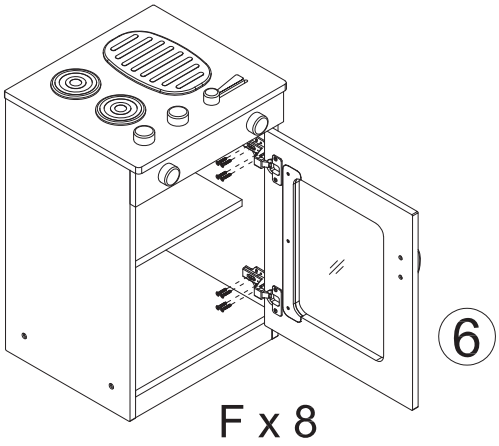

FINISHED

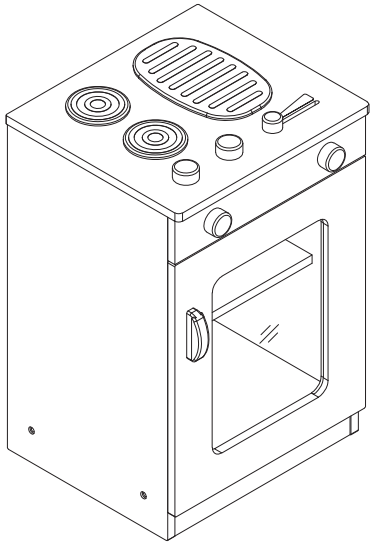

WOODEN OVEN WITH HOB 600MM PRE SCHOOL

19805

NOTES ON USE:

Keep children and others safe by following these simple rules:

- Do not allow climbing on any piece of product.
- Always monitor your child’s activity when in the nursery.

NOTES ON CARE AND MAINTENANCE:

- Do not scratch or chip the finish.
- Inspect the product periodically, contact us for replacement parts orquestions.
- Do not store the productor any parts in extrementem peratures and conditions such as a hot atticora damp, cold basement. These extremes can cause a loss of structural integrity.
- Clean with a damp cloth, then a dry cloth to preserve the original luster and beauty of this fine finish.
- Do not use abrasive chemicals.
- Do not spray cleaners directly onto product.
- Use of a vaporizer near furniture will cause wood to swell and finish to peel.